Office Use Only		
Fee Paid 135 cash pd.	Date Approved _____	Permit Number IW-23-007
Public Hearing: YES NO	Agent Approval: YES NO	

TOWN OF EAST HAMPTON
INLAND WETLANDS & WATERCOURSES AGENCY

Date: 3/16/2023

1. Name of Applicant* Lantern Electrical LLC (Brandon Hicks)

Phone Numbers: Home _____, Business 877-878-3006, Cell 860-604-5944

Home Address: Street 72 Briarwood Drive Town Colchester State/Zip CT 06415

Business Address: Street 256 Oakwood Dr., Suite 3 Town Glastonbury State/Zip CT 06033

* All applications MUST list contact phone numbers. If the applicant is a Limited Liability Corporation or a Corporation, provide the managing member's or responsible corporate officer's name, address, and telephone number.

2. Name of Property Owner (if different from Applicant): Beverly House LLC (Peter Callan) Phone _____

Address: Street 33 Oakum Dock Road Town East Hampton State/Zip CT 06424

As the legal owner of the property listed on this application I hereby consent to the proposed activities. I hereby authorize the members and agents of the Agency to inspect the subject land, at reasonable times, during the pendency of the application and for the life of the permit.

Printed Name: Peter Callan, Signature: _____, Date: 3/16/2023

3. Provide the applicant's interest in the land. _____

4. Site Location and Description: Assessor's Map 1C, Block Q, Lot 2

Address: Street 33 Oakum Dock Road Town East Hampton State/Zip CT

Note: It is the applicant's responsibility to provide the correct site address, map, block, and lot number for the legal notice.

Provide a description of the land in sufficient detail to allow identification of the inland wetlands and watercourses, the area(s) (in acres or square feet) of wetlands or watercourses to be disturbed, soil type(s), and wetland vegetation.

Area of Wetland to be disturbed: 0 feet acres or sq. ft.

Area of Watercourse to be disturbed 0 feet acres or sq. ft.

Area of Upland Review Area to be disturbed: 10 feet acres or sq. ft.(Area within 100' of wetland)

TOTAL AREA OF DISTURBANCE 0 feet acres or sq. ft.

Will fill be needed on site? Yes No If yes, how much fill is needed? N/A cubic yards

The property contains (circle one or more)

WETLANDS, BROOK, RIVER, INTERMITTANT STREAM, VERNAL POOL, SWAMP, OTHER _____

Description of soil types on site: _____

Description of wetland vegetation: _____

Name of Soil Scientist and date of survey: _____

5. Attach a written narrative of the purpose and description of the proposed activity and proposed erosion and sedimentation controls, best management practices, and mitigation measures which may be considered as a condition of issuing a permit for the proposed regulated activity including but not limited to; measures to: (1) prevent or minimize pollution or other environmental damage, (2) maintain or enhance existing environmental quality, or (3) in the following order of priority: restore, enhance or create productive wetland or watercourse resources. Depending on the complexity of the project, include the following: sequence of operations, drainage computations with pre and post construction runoff quantities and runoff rates, plans clearly showing the drainage areas corresponding to the drainage computations, existing wetland inventory and functional assessment, soils report, construction plans signed by a certified soils scientist, licensed surveyor, and licensed professional engineer. Include a construction schedule, impacts to vegetation, and pictures that clearly show the existing conditions of all areas to be disturbed and/or cleared of vegetation.

6. Provide information of all alternatives considered. List all alternatives which would cause less or no environmental impact to wetlands or watercourses and state why the alternative as set forth in the application was chosen. All such alternatives shall be diagramed on a site plan or drawing.

Attach plans showing all alternatives considered.

_____

_____

7. Attach a site plan showing the proposed activity and existing and proposed conditions in relation to wetlands and watercourses and identifying any further activities associated with, or reasonably related to, the proposed regulated activity which are made inevitable by the proposed regulated activity and which may have an impact on wetlands or watercourses. Include a colored grading plan showing areas to be filled (green) and areas to be excavated (brown) that clearly shows existing and proposed contours and proposed limits of disturbance.

8. Attach the names and mailing addresses of adjacent landowners. Attach additional sheets if necessary.
Name _____ Address _____
Name _____ Address _____
Name _____ Address _____

9. Attach a completed DEEP reporting form.
The Agency shall revise or correct the information provided by the applicant and submit the form to the Commissioner of Environmental Protection in accordance with section 22a-39-14 of the Regulations of Connecticut State Agencies.

10. Attach the appropriate filing fee based on the fee schedule in Section 19 of the regulations.
Fee: _____ (Make check payable to "The Town of East Hampton")

11. Name of Erosion Control Agent (Person Responsible for Compliance): Brandon Hicks
Phone Numbers: Home _____, Business 877-878-3006, Cell 860-604-5944
Address: Street 256 Oakwood Dr. Town Glastonbury State/Zip CT 06033

12. Are you aware of any wetland violations (past or present) on this property? YES NO
If yes, explain _____

13. Are you aware of any vernal pools located on or adjacent (within 500')to the property? YES NO

14. For projects that do not fall under the ACOE Category 1 general permit – Have you contacted the Army Corps of Engineers? YES NO

15. Is this project within a public water supply aquifer protection area or a public water supply watershed area? YES NO
If so, have you notified the Commissioner of the Connecticut Department of Public Health and the East Hampton WPCA? YES NO
(Proof of notification must be submitted with your application.)

16. PUBLIC HEARINGS ONLY. The applicant must provide proof of mailing notices to the abutters prior to the hearing date.

17. ***As the applicant I am familiar with all the information provided in the application and I am aware of the penalties for obtaining a permit through deception or through inaccurate or misleading information.***
Printed name: Brandon Hicks, Signature: _____, Date: 3/16/2023
Please Note: You or a representative must attend the Inland Wetlands meeting to present you application.

33 Oakum Dock Road 3/3/2023
East Hampton, CT 06424
Deck Replacement

Construction Narrative for the
Inland Wetlands & Watercourse Agency

This project includes replacing a pre-existing residential deck that is approximately 700 square feet with a new deck that is approximately 500 square feet at 33 Oakum Dock Road, East Hampton, CT. (See attached sketches A, B & C.) The expected time frame to complete the work is one to three weeks (weather permitting). The closest part of the new deck is approximately 100ft from Great Hill Pond Brook and approximately 50 feet from a man-made pond. (See attachments D & E.)

The footings for the deck include a series of 15 Solar Foundations USA helical ground screws. (See attachments F & G for engineer certification and specifications of the helical ground screws.) Posts will be made from 6”x6” pressure treated beams. All floor joists will be made of 2”x10” lumber and attached to the house to a newly installed ledger lagged rim joist with galvanized steel hold downs. Decking will be made of 1”x6” pressure treated decking boards. All railings will made with the Deckorators’ cable railing system. (See attachment H for install specifications.)

As previously mentioned, the new deck is in the vicinity of a man-made pond and Great Hill Pond Brook. The process used to install the helical ground screws disturbs the surrounding land significantly less than digging traditional footings. Less than 10 square feet of land will be disturbed with the use of helical ground screws. Any disturbed soil will be raked level in place. There is a steel bulkhead style retraining wall in place separating the house/deck from the wetlands. This is sufficient to keep any debris from construction away from any wetlands.

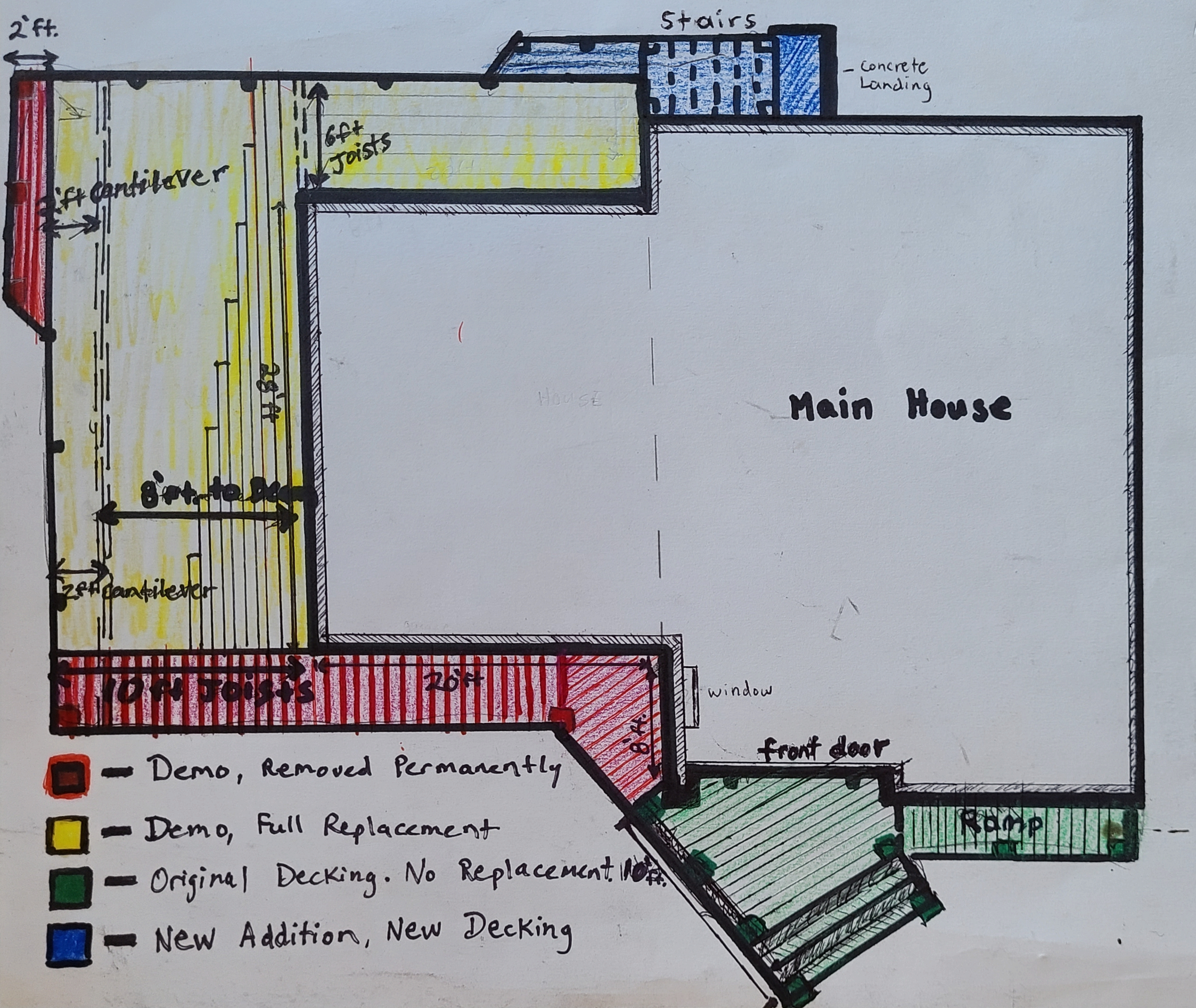
2'ft.
Stairs
concrete Landing
6ft Joists
2'ft cantilever
8'ft to Deck
2ft cantilever
10 ft Joists
20ft
window
8'ft
front door
Main House
Ramp
10ft
Demo, Removed Permanently
Demo, Full Replacement
Original Decking. No Replacement.
New Addition, New Decking

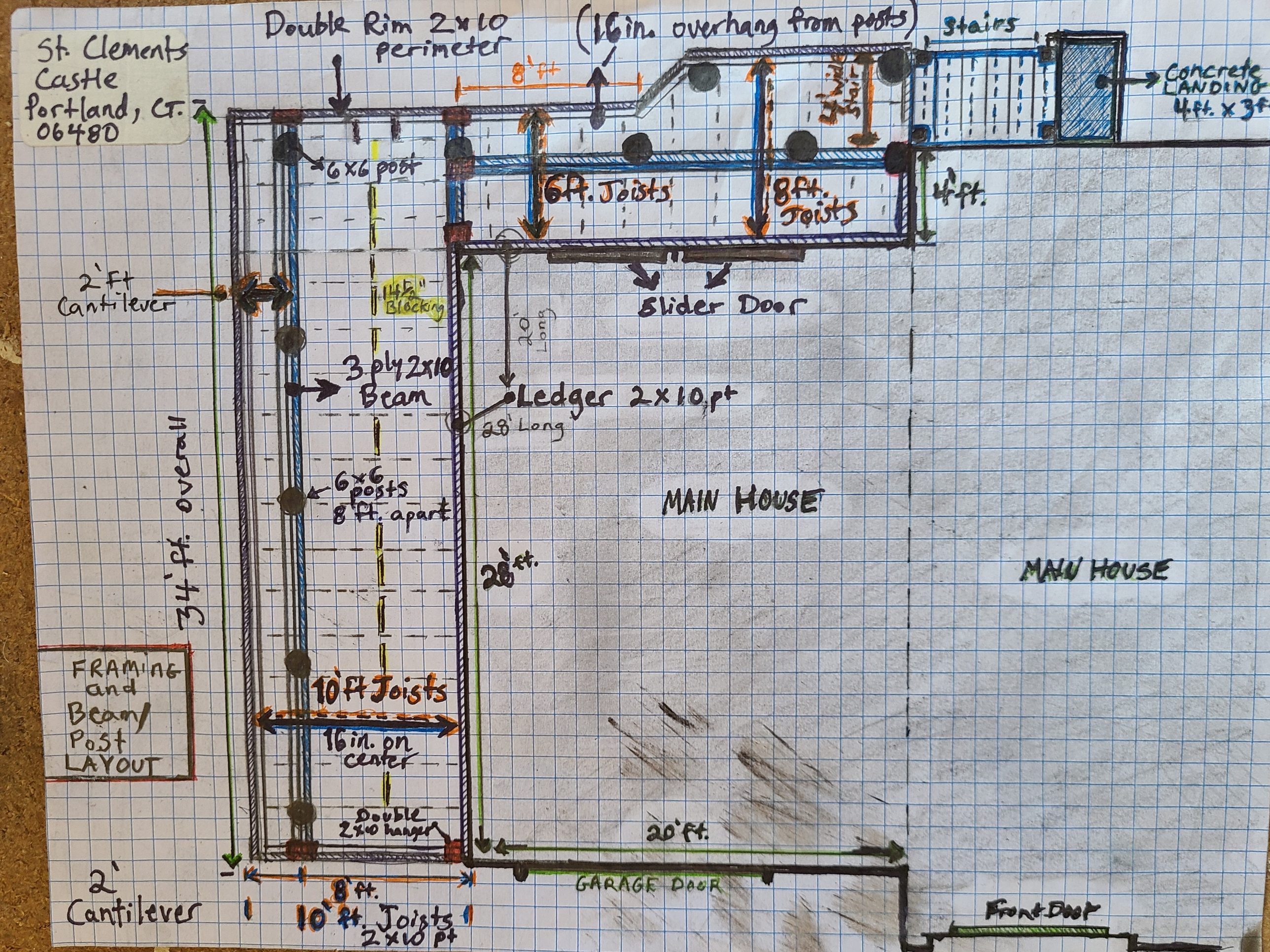
St. Clements Castle
Portland, CT. 06480
Double Rim 2x10 perimeter
(16in. overhang from posts)
8'ft
Stairs
Concrete LANDING 4ft. x 3ft
6x6 post
6ft. Joists
8ft. Joists
4ft.
2'Ft Cantilever
14½" Blocking
Slider Door
20' Long
3 ply 2x10 Beam
Ledger 2x10 pt
28' Long
34' ft. overall
6x6 posts 8 ft. apart
MAIN HOUSE
28'ft.
MAIN HOUSE
FRAMING and Beam/ Post LAYOUT
10'Ft Joists
16in. on center
Double 2x10 hanger
20'ft.
GARAGE DOOR
2' Cantilever
8'ft.
10'ft. Joists 2x10 pt
Front Door

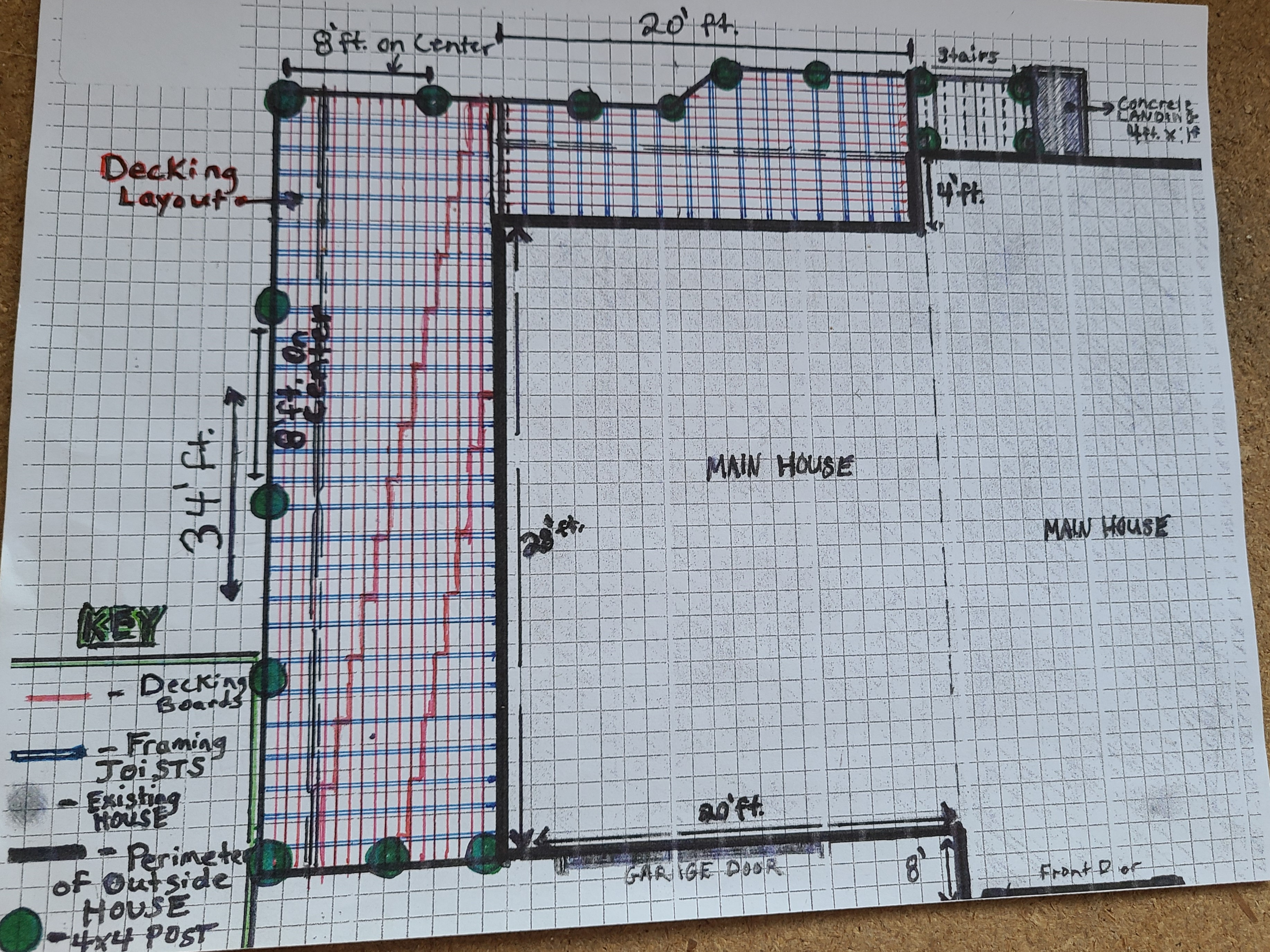
8' ft. on Center
20' ft.
Stairs
Concrete LANDING 4ft. x 4ft
Decking Layout
4' ft.
8' ft. on center
34' ft.
MAIN HOUSE
MAIN HOUSE
28' ft.
KEY
- Decking Boards
- Framing JOISTS
- Existing HOUSE
- Perimeter of Outside HOUSE
- 4x4 POST
20' ft.
GARAGE DOOR
8'
Front Door

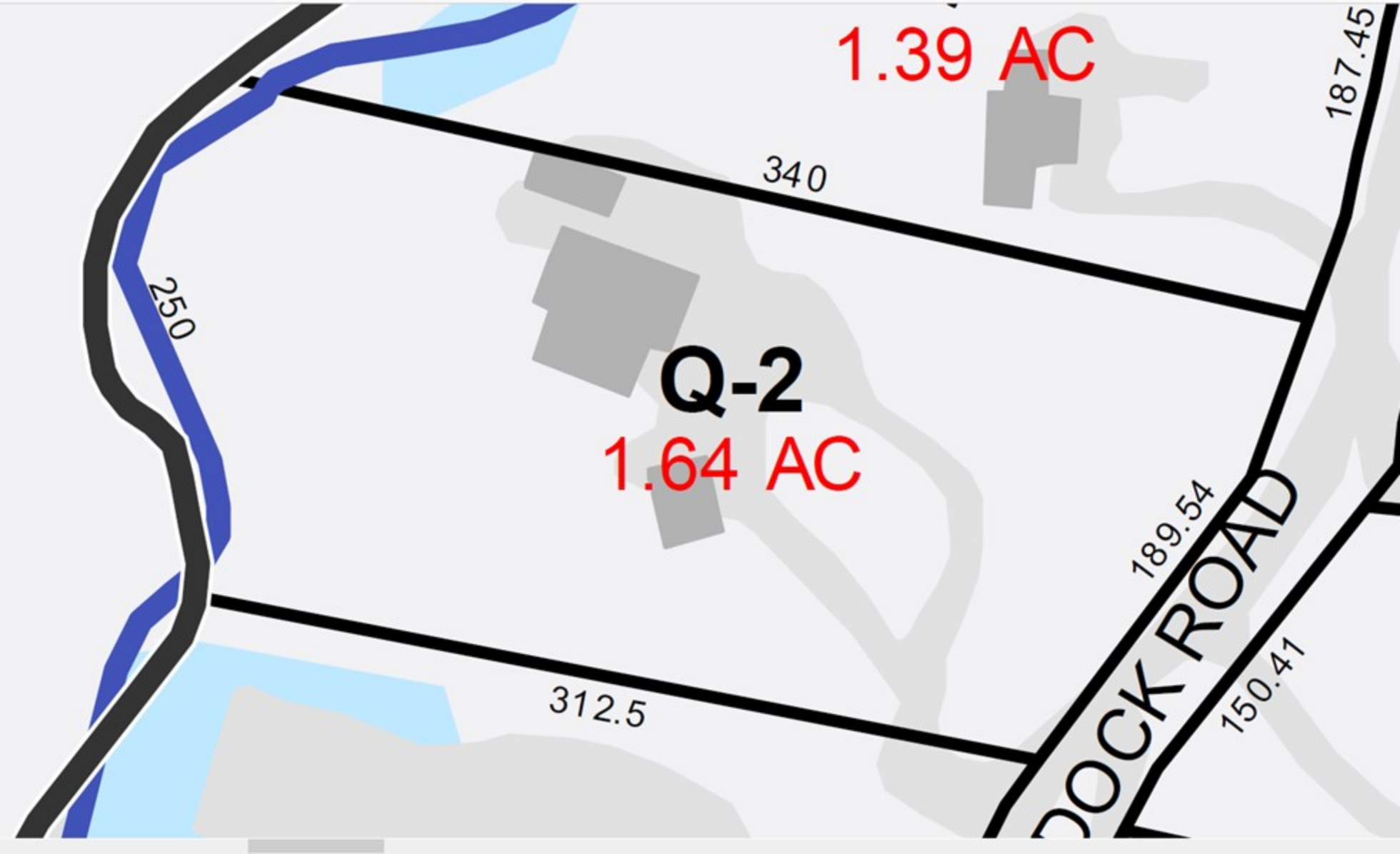
1.39 AC
187.45
340
250
Q-2
1.64 AC
189.54
DOCK ROAD
150.41
312.5


Great Hill Pond Brook
33
Saved to U

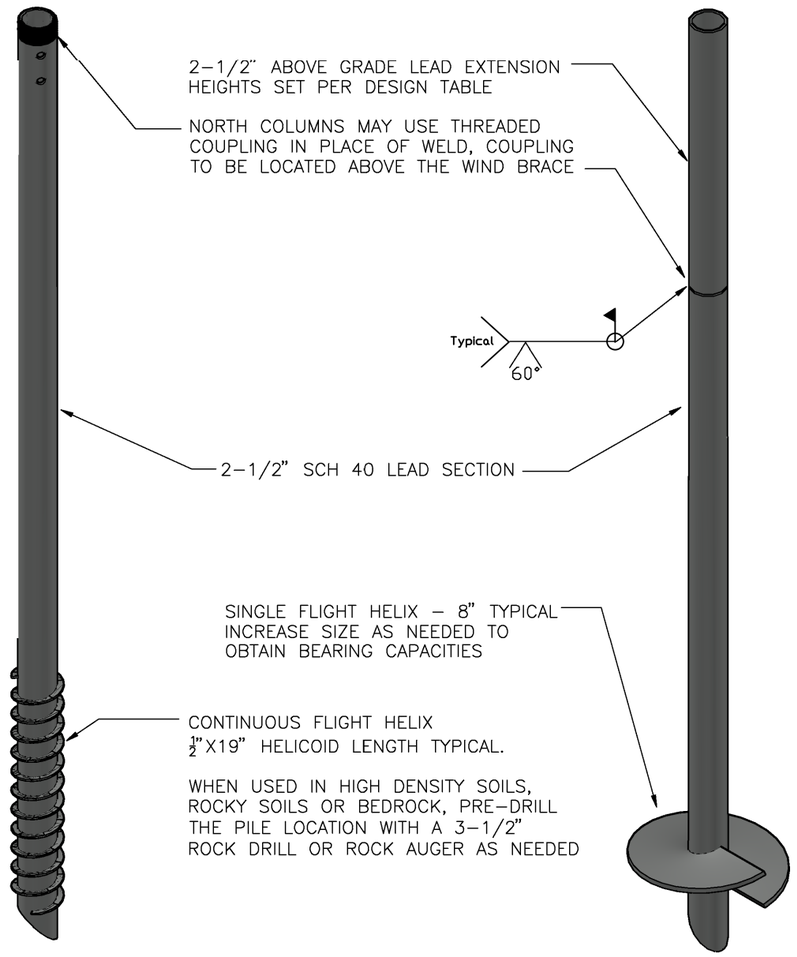

HELICAL PILE DETAIL

N.T.S.

SPECIFICATION REQUIREMENTS:

THE FOLLOWING MATERIAL SPECIFICATION REQUIREMENTS PERTAIN TO THE FABRICATION OF THE SOLAR FOUNDATIONS USA GROUND MOUNT SOLAR SUPPORT STRUCTURE AS INDICATED ON THESE DRAWINGS.

1. SOLAR FOUNDATION ALUMINUM RAILS SHALL CONFORM TO ASTM B221.
2. STRUCTURAL STEEL TUBING SHALL BE ASTM A500 HIGH YIELD (60 KSI).
3. STEEL PIPE FOR PILES SHALL CONFORM TO ASTM A500 GRADE C.
4. STEEL PILE EXTENSIONS SHALL BE ASTM A53 GRADE B.
5. STEEL PIPE FOR DIAGONAL BRACING SHALL BE ASTM A53 GRADE A.
6. FABRICATED STEEL PLATE FOR COLUMN CAP ASSEMBLIES, BRACING CLAMPS, ETC. SHALL BE ASTM A36 OR A1011.
7. STEEL BOLTS FOR CAP FASTENERS SHALL CONFORM TO SAE J429 GRADE 5. ALL OTHER BOLTS SHALL CONFORM TO SAE J429 GRADE 5 OR BETTER.
8. STEEL U-BOLTS SHALL CONFORM TO ASTM 1018.
9. USS FLAT STEEL WASHERS SHALL CONFORM TO ASTM F844 AND NUTS FOR STEEL CONNECTIONS SHALL CONFORM TO ASTM A563 GRADE A.
10. ALL FIELD WELDING SHALL CONFORM TO AWS D1.1/D1.1M -STRUCTURAL WELDING CODE REQUIREMENTS.
11. ALL STEEL SHALL BE HOT-DIP GALVANIZED PER ASTM A123 OR A153 AFTER ALL FABRICATION HAS BEEN COMPLETED.

INSTALLATION REQUIREMENTS:

1. THE MINIMUM AVERAGE INSTALLATION TORQUE REQUIRED TO OBTAIN THE REQUIRED INDICATED CAPACITIES AND THE MINIMUM INSTALLATION DEPTH SHOWN ON THE PLANS SHALL BE SATISFIED PRIOR TO TERMINATION OF THE INSTALLATION. THE INSTALLATION TORQUE SHALL BE AN AVERAGE OF THE INSTALLATION TORQUES INDICATED DURING THE LAST 1 FOOT OF INSTALLATION.

2. THE TORSIONAL STRENGTH RATING OF THE TORQUE ANCHOR SHALL NOT BE EXCEEDED DURING THE INSTALLATION. IF THE TORSIONAL STRENGTH LIMIT OF THE ANCHOR HAS BEEN REACHED, BUT THE ANCHOR HAS NOT REACHED THE TARGET DEPTH, PERFORM THE FOLLOWING:

   2.1. IF THE TORSIONAL STRENGTH LIMIT IS ACHIEVED PRIOR TO REACHING THE TARGET DEPTH, THE INSTALLATION MAY BE ACCEPTABLE IF REVIEWED AND APPROVED BY THE ENGINEER.

   2.2. THE INSTALLER MAY REMOVE THE TORQUE ANCHOR AND INSTALL A NEW ONE WITH SMALLER DIAMETER HELICAL PLATE.

   2.3. IF USING A CONTINUOUS FLIGHT PILE, PRE-DRILL THE PILE LOCATION WITH A 3-1/2" ROCK AUGER OR 3-5/8" ROCK DRILL AS NEEDED.

3. IF THE TARGET DEPTH IS ACHIEVED, BUT THE TORSIONAL REQUIREMENT HAS NOT BEEN MET THE INSTALLER MAY DO ONE OF THE FOLLOWING:

   3.1. INSTALL THE TORQUE ANCHOR DEEPER TO OBTAIN THE REQUIRED CAPACITY

   3.2. REMOVE THE TORQUE ANCHOR AND INSTALL A NEW ONE WITH A LARGER DIAMETER HELICAL PLATE OR ONE WITH MULTIPLE HELICAL PLATES.

   3.3. REDUCE THE LOAD CAPACITY ON THE INDIVIDUAL TORQUE ANCHOR BY PROVIDING ADDITIONAL TORQUE ANCHORS AT A REDUCED SPACING.

SHEET 3 OF 4

DATE	REVISION	DRAWN BY:	REVIEW BY:
12/07/2022	ORIGINAL	JB	JD

LANTERN ELECTRICAL

PROJECT:
HICKS RESIDENCE
46 JERRY DANIELS ROAD
MARLBOROUGH, CT 06447

Solar Foundations USA

1142 River Road, New Castle, DE 19720 Ph: (855) 738-7200 Fax: (866) 644-5665

Date: December 22, 2022

Subject: 33 Oakum Dock Road
East Hampton CT
Helical Pile Deck Piers
Conformance to the Connecticut State Building Code

To whom it may concern,

Background:

The 2018 Connecticut Building Code refers to the 2015 International Building Code (IBC) with state directed changed in Chapter 16 and Appendix N for wind and snow load. The following Sections of the IBC pertain to helical piles that correspond to those manufactured by Solar Foundations USA and used in both deck and ground mount solar arrays applications. The pertinent subsections of the IBC are as follows:

- The 2015 IBC, Section 1802 refers to Helical Piles as one of the acceptable foundation types that by not meeting the stated definition of a Shallow Foundation is by default classified as a Deep Foundation.
- The 2015 IBC, Section 1803.5.5 states "Where deep foundations will be used, a geotechnical investigation shall be conducted and shall include all of the following, unless sufficient data upon which to base the design and installation is otherwise available."

Discussion:

Solar Foundations USA through our authorized installers install ground mount solar arrays using helical piles that are drilled into the ground by certified installation personnel using a calibrated drill rig. The Certified Installer uses the drill rig instrumentation to record the pile installation torque and corresponding developed pile bearing capacity. This in situ monitoring process allows for determination of actual developed capacities in lieu of theoretical capacities as could be calculated from a geotechnical soil analysis. The Certified Installer confirms that the actual developed bearing capacity meets or exceeds the project specific required bearing capacity as stated on the stamped and signed design documents. In the rare event that developed capacities do not exceed required capacity, then the Certified Installers are instructed to immediately call Solar Foundations USA engineering personnel for direction to correct the deficiency (deeper piles, additional piles, etc). In addition, as part of the standard installation process, the developed pressures achieved during installation of each pile as well as depth of each pile are recorded by the Certified Installer. This certified information is provided back to Solar Foundations USA Engineering and used to generate a certified installation report for each project that is signed and stamped by the design engineer.

Conclusion:

The real time pile installation data obtained during pile insertion permits for the determination of as installed capacities through the direct correlation of the torque on the drill rig to actual pile bearing capacity. The generation and use of this data meets the IBC requirement of "sufficient data" as stated in Section 1803.5.5. Upon request the Building Official will be provided a copy of the certified installation report for that installation verifying that the installed helical piles exceed the design loads.

Please call if you have any questions or require any additional information.

Respectfully,

James C. Douglas
Director of Engineering
CT PE # 28343

STATE OF CONNECTICUT
JAMES C. DOUGLAS
No. 28343
LICENSED
PROFESSIONAL ENGINEER

CABLE RAILING INSTALLATION INSTRUCTIONS

Items you will need:

- Drill/power screwdriver
- Assorted drill bits
- Hammer
- Miter or circular saw with fine-tooth carbide tip blade
- Construction adhesive
- Marked speed square
- Two clamps
- Carpenter's level
- Carpenter's pencil
- Adjustable wrench or socket wrench
- Safety glasses/goggles
- Assorted fasteners (see instructions)
- Tape measure
- Wire cutters

For each 6' or 8' on-center railing section, you will need:

- 1 - 6' or 8' Deckorators ALX Pro top rail
- 1 - Deckorators post sleeve kit per post (there will be more posts than railing sections)
- Deckorators stainless steel cable rail (sold on spools of 500')
- Cable hardware: 1 pack per cable, which includes (2) eye lag screws, (1) fork jaw and (1) turnbuckle
- Cable spacer (sold in packs of 2): 1 per 6 ft section, 2 per 8 ft section

Installation instructions:

Prior to construction, check with your local regulatory agency for special code requirements in your area. Common railing heights are 36" and 42". Structural support should come from the continuation of deck support posts that extend up through the deck floor or from railing posts that are bolted to the inside of the rim or outer joists. Never span more than 8' on-center between railing posts. Install railing posts before deck boards are fastened to the joists. Predrilling of all railing components is essential to successful installation. Do not over-tighten screws. Read instructions completely to get an understanding of how the product goes together and how each piece affects the other. Note: Use clean tools in order to reduce rust explosion on stainless surfaces.

We recommend using a new 5/8" chrome-plated socket to protect the fittings from raw steel. Avoid installing with rusty tools, as they leave rust deposits on the surface of the fittings almost immediately. After installation, it is critical to clean the system completely with a stainless cleaner and a soft clean rag in order to clear the surface from carbon deposits.

Step 1: Determine the number of railing posts needed for your deck. Post spacing is 6' or 8' on-center. **Corner applications** (fig. 1a): When taking cable railing through a corner, do not bend the cable past 45º at any time. When turning 90º, a 2-step turn using a double corner post configuration is required. Example: A 12'x16' deck attached to a building with a 4' access opening on one side, and one 90º corner, will require a total of nine posts (fig. 1b). Or you can stop your run and start a new one.

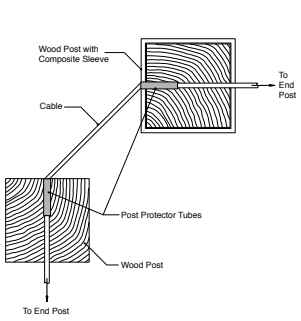

fig. 1a

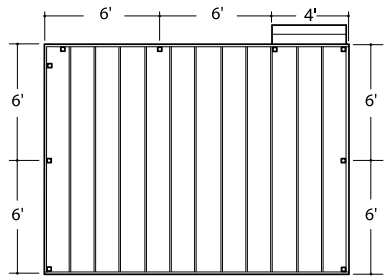

fig. 1b


fig. 2a

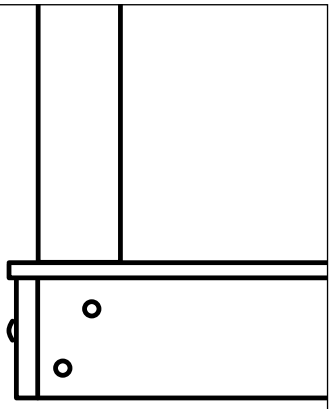
fig. 2b

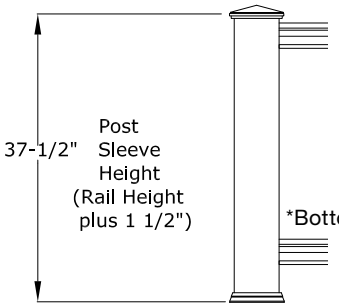

fig. 3

Step 2: Install rail posts prior to installing deck boards. Cedar or pressure-treated pine 4x4 railing posts provide the structural strength for the railing. The length of each post is determined by the total of the joist width (7-1/4") + decking thickness (1") + railing height (36" or 42") + spacing for post cap (1-1/4") = 45-1/2" or 51-1/2". **Important:** Do not notch the 4x4 railing posts. Notching will reduce the strength of the post and could result in railing collapse or failure (fig. 2a).

Step 3: Position, plumb with a level, and clamp the rail post on the interior face of the joist. Plumb again. The 4x4 railing post should be bolted to the inside of the joists using two 1/2"x6" galvanized carriage bolts. Corner posts use a third carriage bolt inserted through the adjacent joist (fig. 2b).

CABLE RAILING INSTALLATION INSTRUCTIONS

Step 4: Install decking. Notch deck boards to fit around the 4x4 railing posts. Allow 1/4" between the deck boards and any permanent structure or post. Additional blocking may be necessary on the 4x4 railing posts for fastening deck boards.

Step 5: Trim 4x4 post sleeves to length if you plan to use a post cap. Post sleeves should be a minimum of 1-1/2" longer than the railing height (fig. 3). Example: For a 36" railing, trim post sleeves to a minimum of 37-1/2", or longer if desired. Slide a trimmed post sleeve over each 4x4 railing post. Use shims as needed to create a snug fit. Slide a post base trim over each post sleeve.

Step 6: Find the center of your post sleeve and clamp the cable spacer in place. This will be your template for predrilling holes for cables. Predrill holes using a 3/16" drill bit (fig. 4). *Note: When running a cable through the post, drilling halfway through one side of the post and then remeasuring and drilling through the other side will result in a much easier, cleaner finish. You can also make a template by using a 2x4 and aligning it to your post sleeve.*

Step 7: *Refer to specific instructions included in the railing kit to install the top rail to your post.* Use the included connectors to assemble the cable spacer(s) to the top rail. Line up the connector with the center of your rail for 6' applications and mark for positioning. Position cable spacer on deck and fasten with included screws. *Note: Use one cable spacer per 6' section and two per 8' section (1 spacer every 2.5 ft for 8').*

Step 8: Install eye lag screws into the predrilled post sleeve holes on both ends of rail (fig. 5). *Tip: Use a 5/8" socket and drill to install eye lags into post.*

Step 9: Remove the pinch pin from the fork jaw and turnbuckle and install into eye lag screws. *Note: Install all fork jaws on one end of rail and all turnbuckles on other end.*

Step 10: Open turn buckle all the way before installing cables.

Step 11: To install cable, start at the turnbuckle location and feed cable through cable spacers/posts to fork jaw location. To install cable into fork jaw or turnbuckle, slide jaw housing onto one end of the cable. Slide the jaws onto the cable. Place the brass pressure ring onto the cable 5 mm from the end. Slide the jaw housing down over the jaws (fig. 6). Tighten the lock nut firmly to the jaw housing. Run cable through cable spacer(s)/post.

Step 12: Repeat step 10 on opposing side of cable to create tension. *NOTE: Install all cable before tightening.*

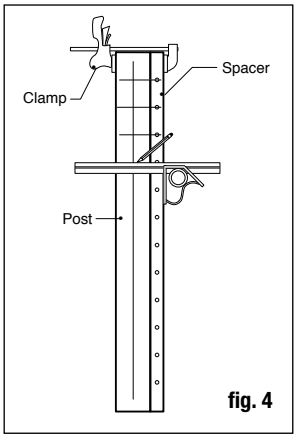

fig. 4

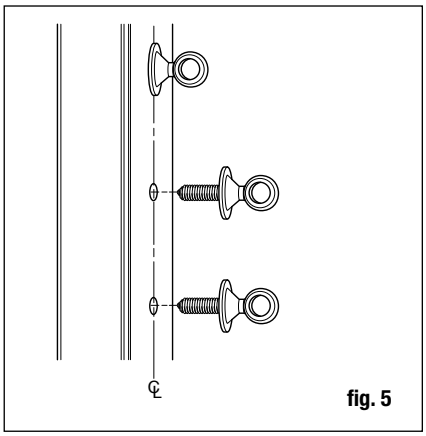
fig. 5

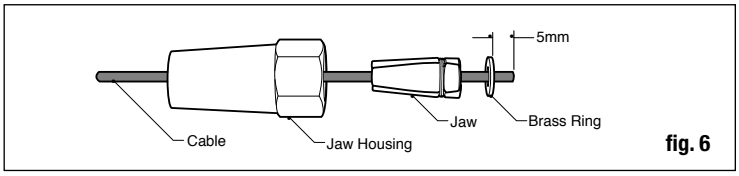

fig. 6

Step 13: To tighten cable, start at the center point and alternate between tightening top and bottom cables by inserting a screwdriver in the turnbuckle and turning to create tension. Use a wrench to hold cable in place so it doesn't turn along with turnbuckle. To finish, tighten nut from each side of turnbuckle. *Tip: Use two wrenches (#10 and #12) to hold nut and jaw assembly to tighten.*

Step 14: Wipe down all stainless surfaces with stainless cleaner after complete installation.

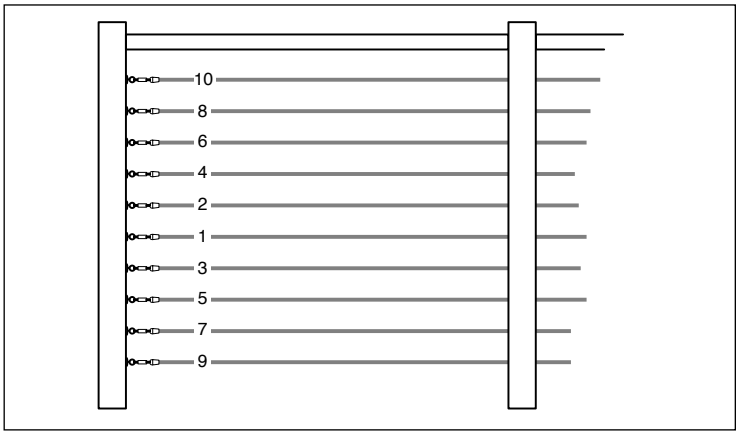

933 US Route 202 Greene, ME 04236-3466 800.880.6278 8548_1/19

Deckorators.com